Completed document

Model: WFE946SA

PNC: 94000179770

MODEL: WFE946SA

EX. VIEW DRAWING 7954
OVEN ASSEMBLY

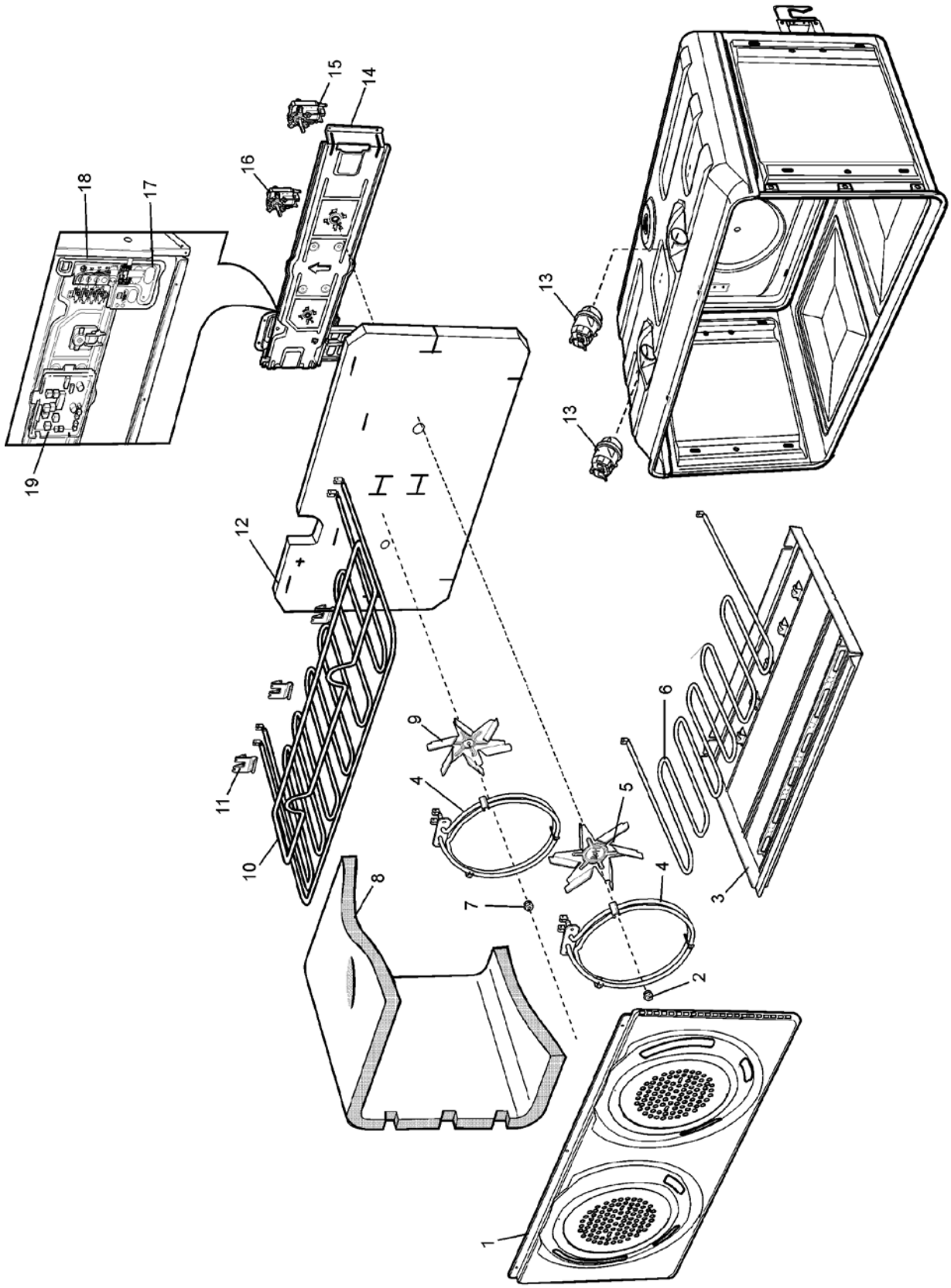

MODEL: WFE946SA

EX. VIEW DRAWING 7972
HOB ASSEMBLY

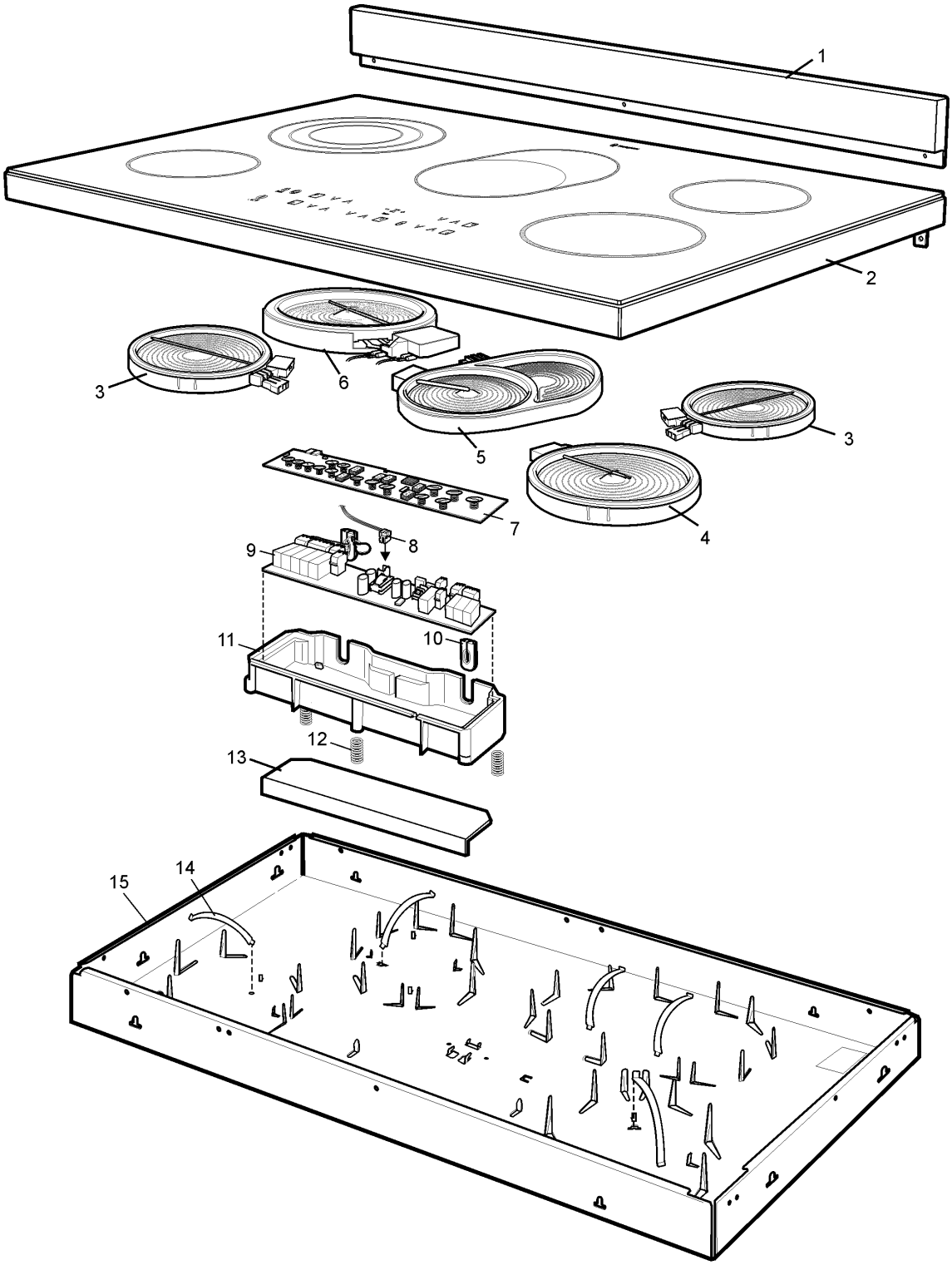

MODEL: WFE946SA

EX. VIEW DRAWING 7968
CHASSIS ASSEMBLY

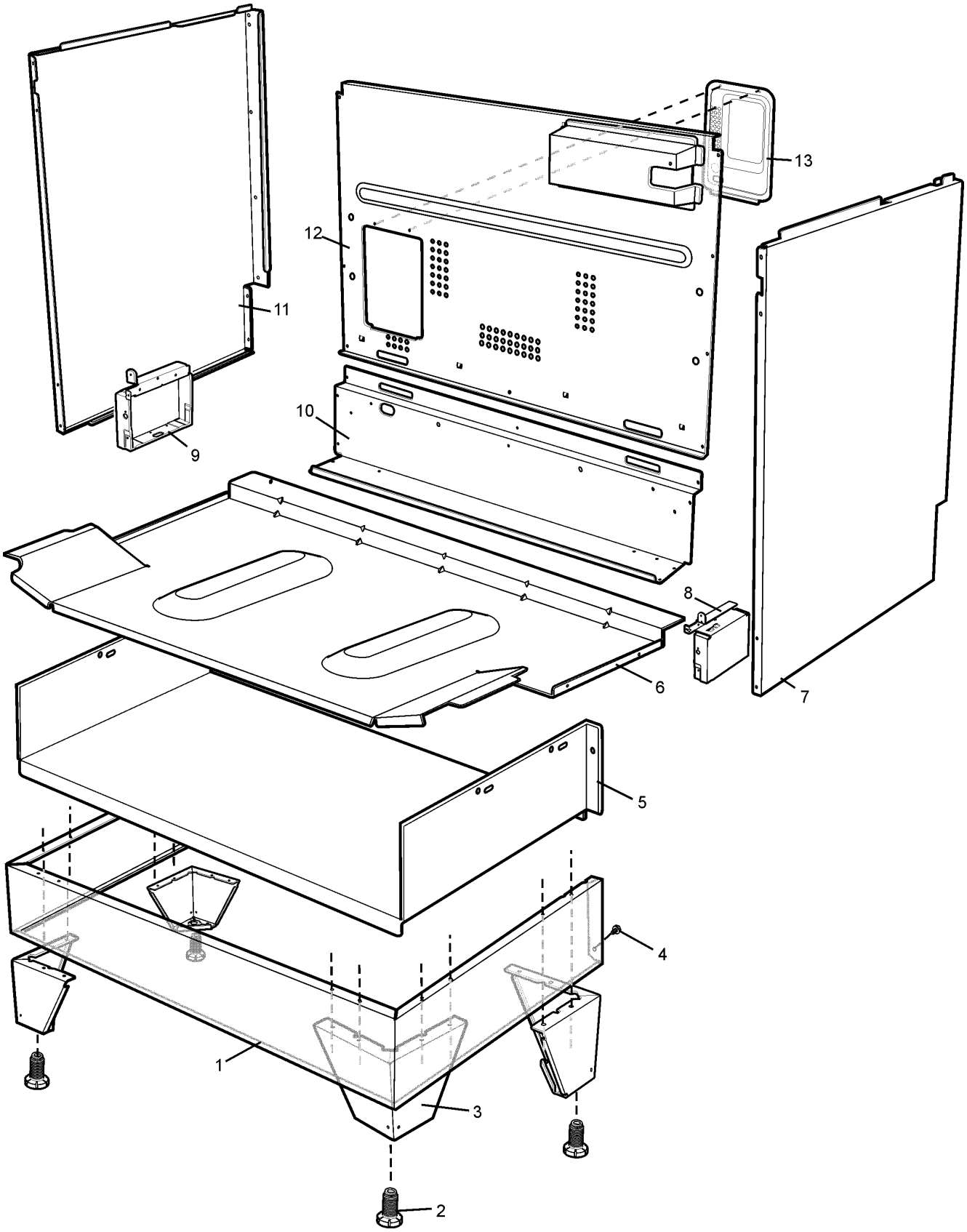

MODEL: WFE946SA

EX. VIEW DRAWING 7966
CHASSIS ASSEMBLY

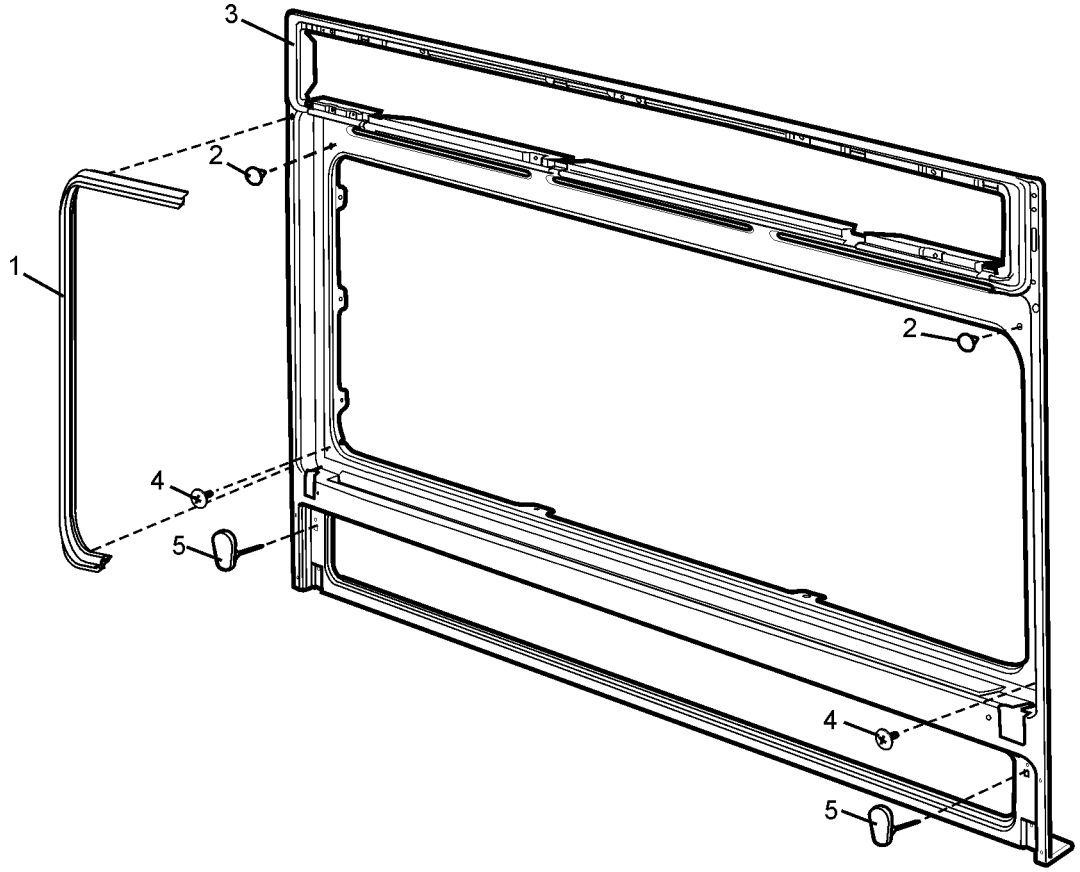

0038 012 625

MODEL: WFE946SA

EX. VIEW DRAWING 7956
CONTROL PANEL ASSEMBLY

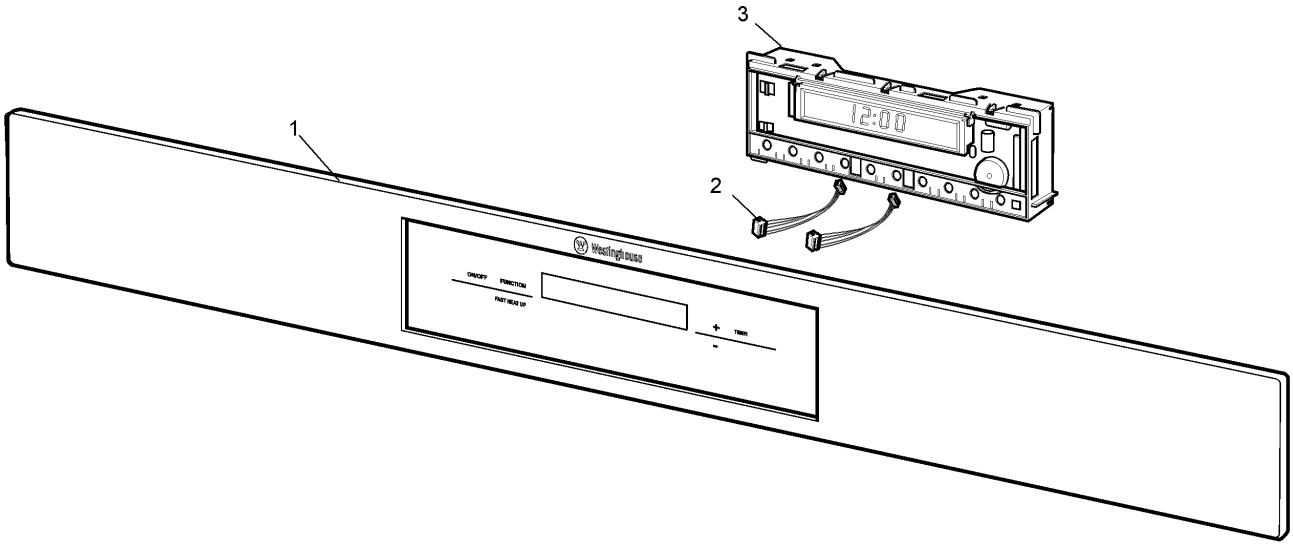

MODEL: WFE946SA

EX. VIEW DRAWING 7960
PANEL DECK ASSEMBLY

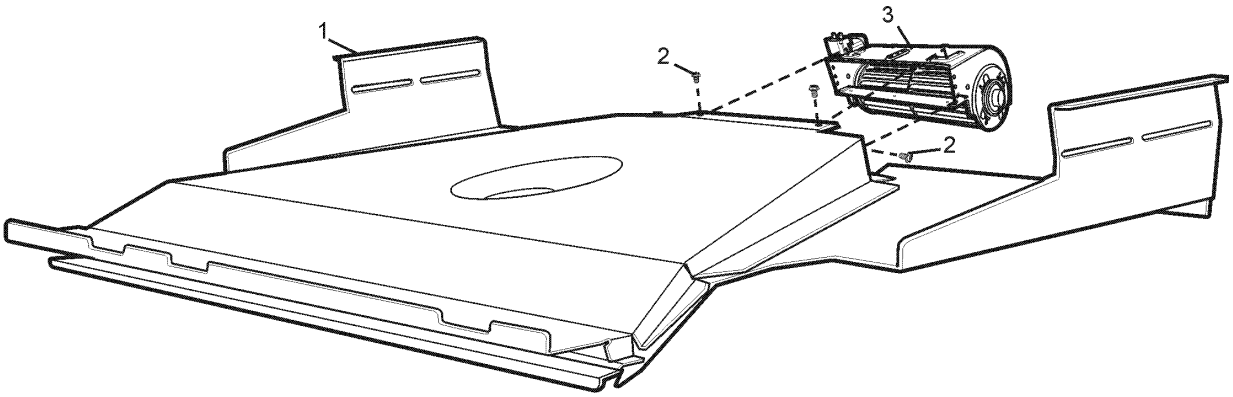

0263 010 579

MODEL: WFE946SA

EX. VIEW DRAWING 7957
INTERNAL PACK

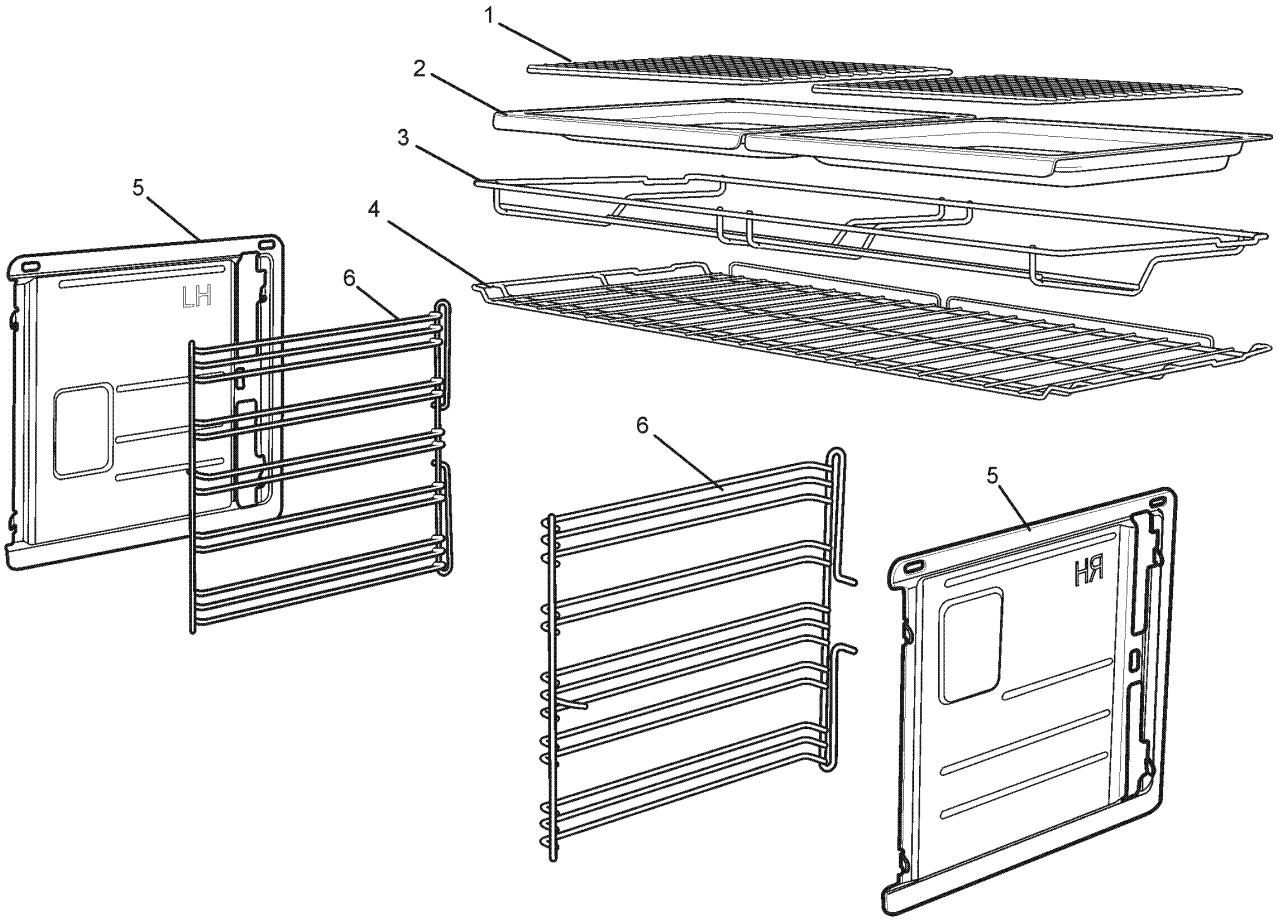

0009 001 749

MODEL: WFE946SA

EX. VIEW DRAWING 7950
OVEN DOOR ASSEMBLY

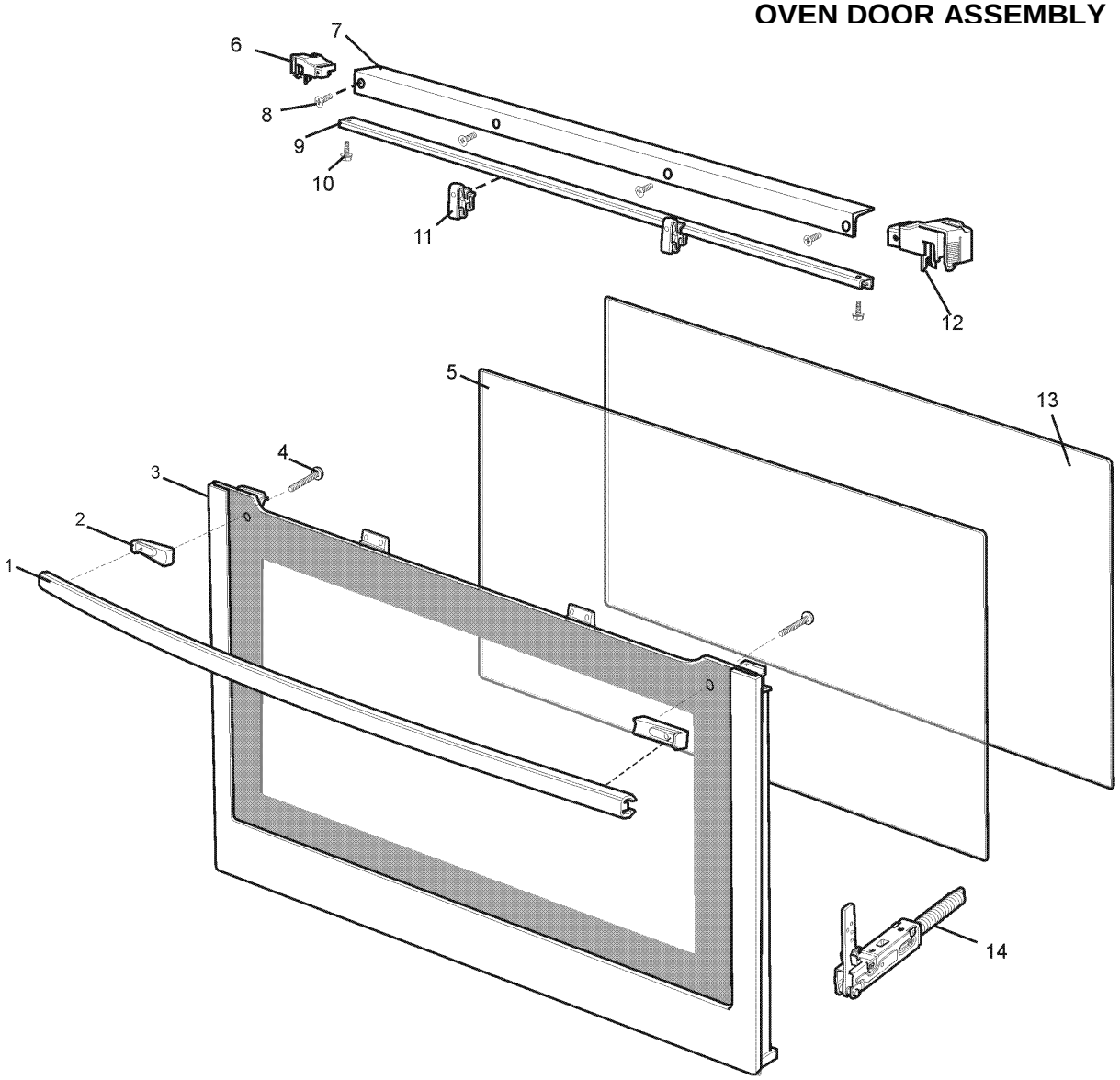

MODEL: WFE946SA
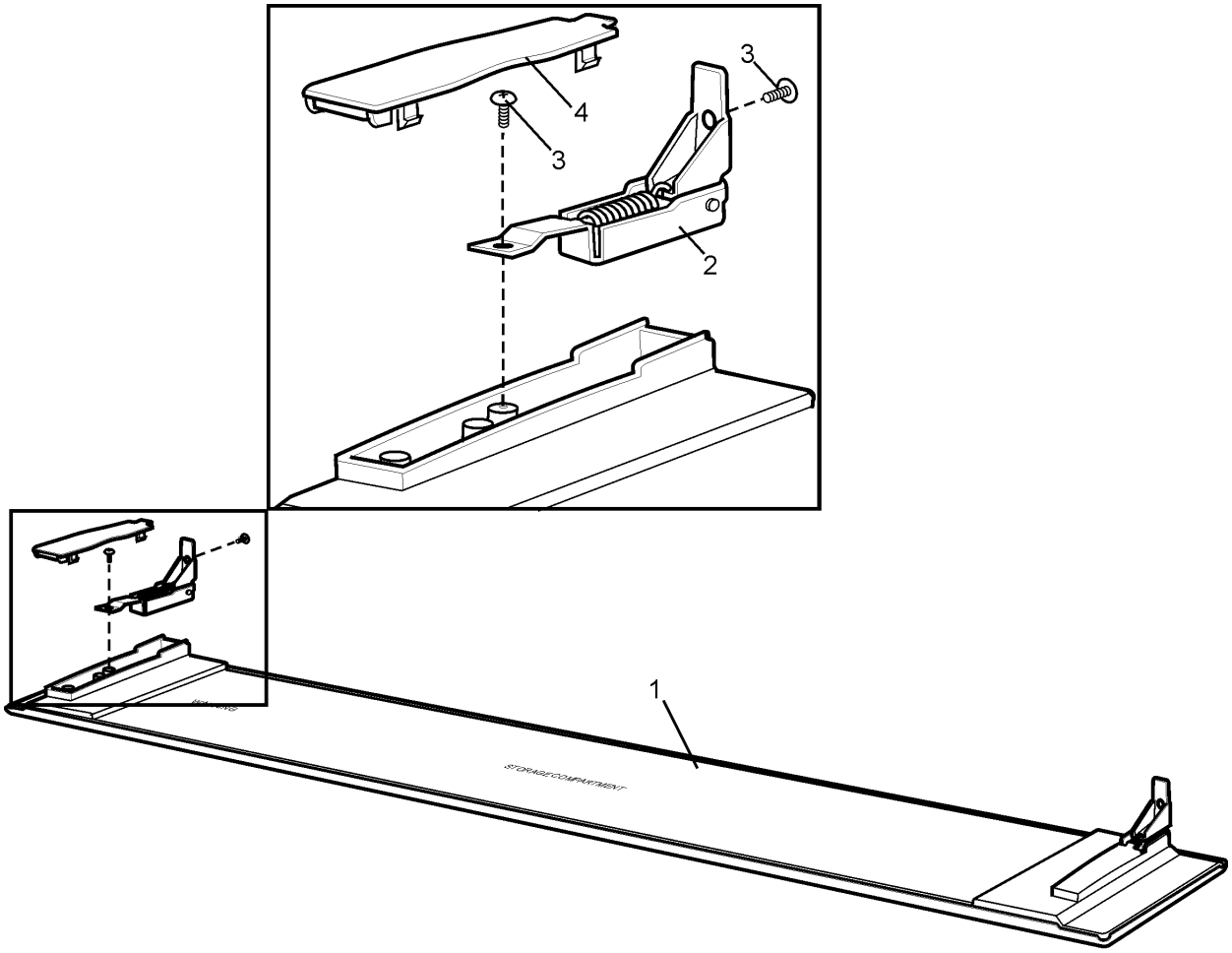
EX. VIEW DRAWING 7970
STORAGE DRAWER ASSEMBLY